1. Cassa strumento / Instrument case
2. Fondello / Rear of instrument
3. Pulsante UP / Push button UP
4. Pulsante DOWN / Push button DOWN
5. Connettore RJ45 / RJ45 Connector
6. Display LCD / LCD Display

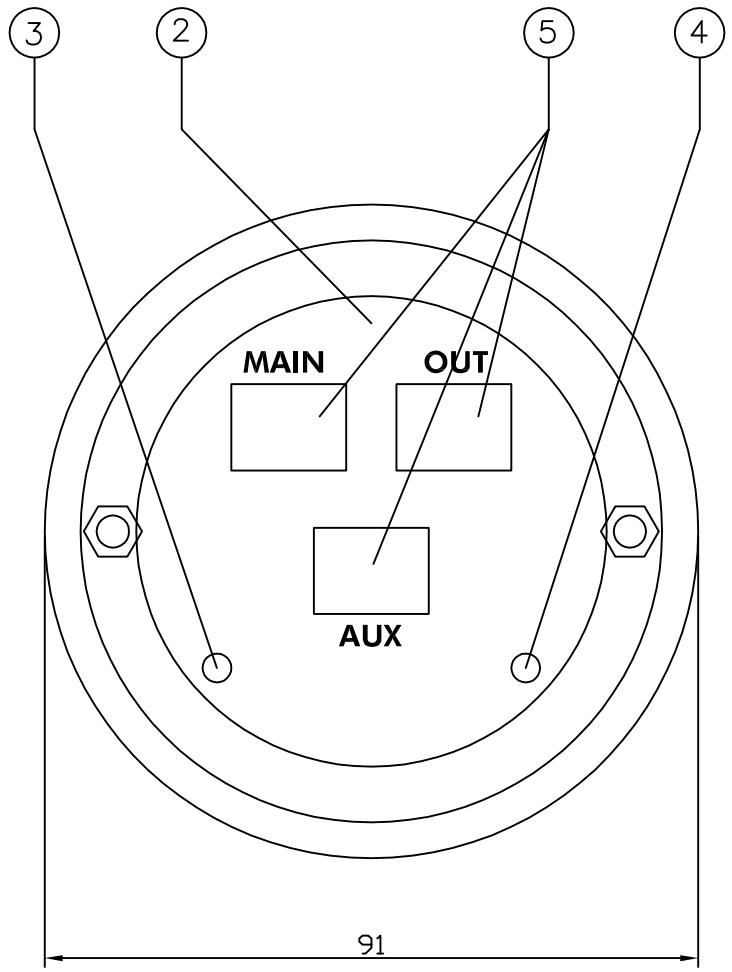

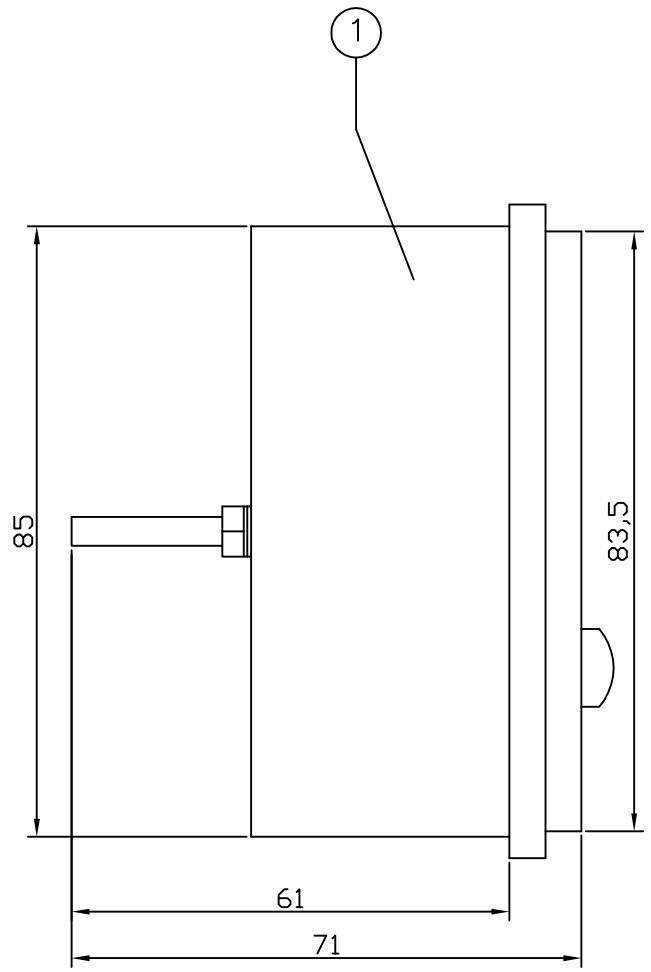

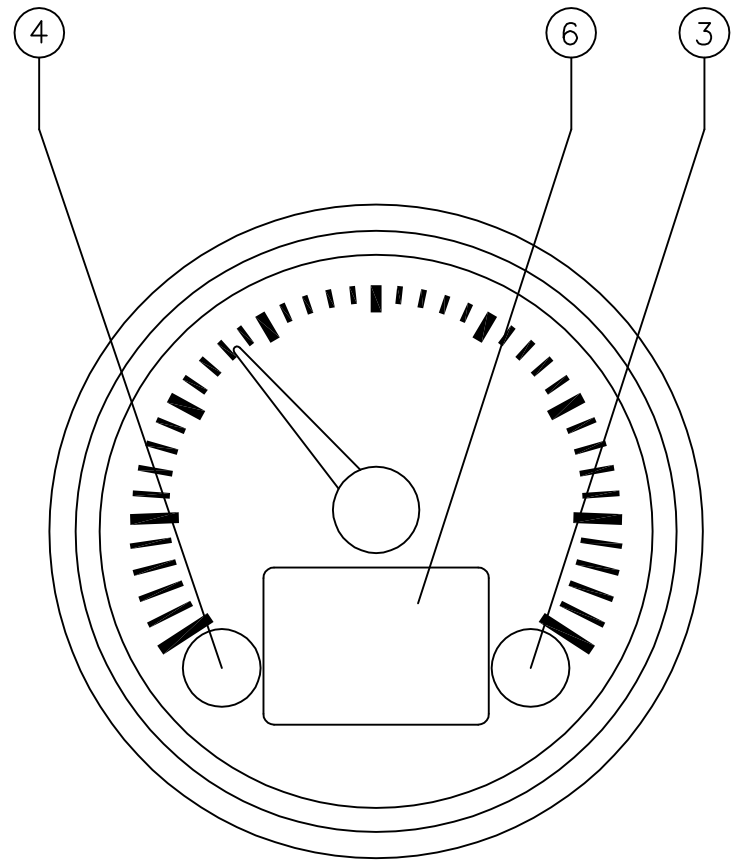

Staffa fissaggio / Holding bracket

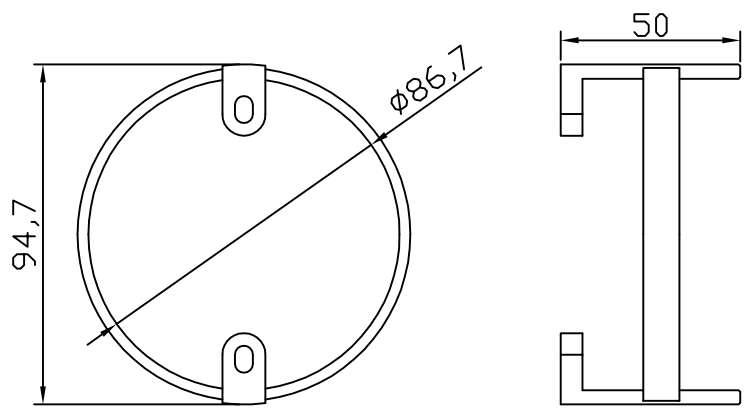

Lunetta rotonda / Round bezel

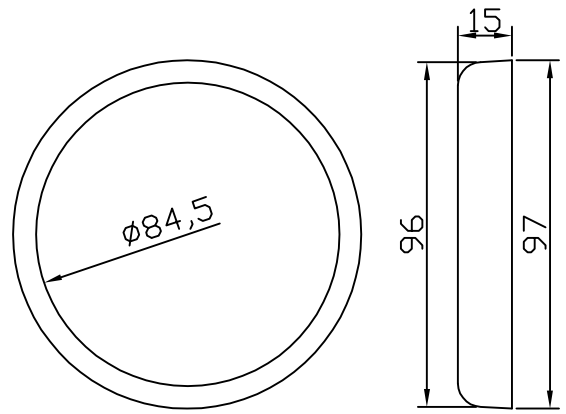

Dimensioni in mm / All dimensions are in mm

Rev:	Date:	Descrizione modifiche - Description of changes:
0	29/01/16	Prima emissione

SAN GIORGIO S.E.I.N. GENOVA - ITALY
Tel. 010-8301222 - www.sangiorgiosein.com

Dimensionale contagiri OmniLink serie RQ85
Dimensional tachometer OmniLink series RQ85

Number:	Sheet:	Date:	Size:
D160201	*1/1*	*29/01/16*	*A3*

Compiled:	Checked:	Approved:
Garsi P.	*Manuelli M.*	*Manuelli M.*